TECHNOCRAT AUTOMATION TRAINING INSTITUTE

PLC SCADA Training in Chennai

Our Contact Details:

#122, 2nd Floor, Opportunity Towers, Above Addidas Showroom, Nelson Manickam Road Chennai, Tamil Nadu, 600029, +91 98655 88121.

WEBSITE: http://www.tiia.co.in

If you are looking forward to getting ***PLC Scada Training in Chennai***, the best place to get it would be Technocrat. We offer exclusive training for Scada in PLC for candidates across India. We also have students from overseas who benefit from our ***PLC Scada training***. As we provide free accommodation to all the candidates who are not residents of Chennai, you can still get your ***scada training in Chennai*** if you are up for it. Technocrat is the best place for any type of ***PLC Scada training*** because we provide excellent training facilities and laboratory for our candidates.

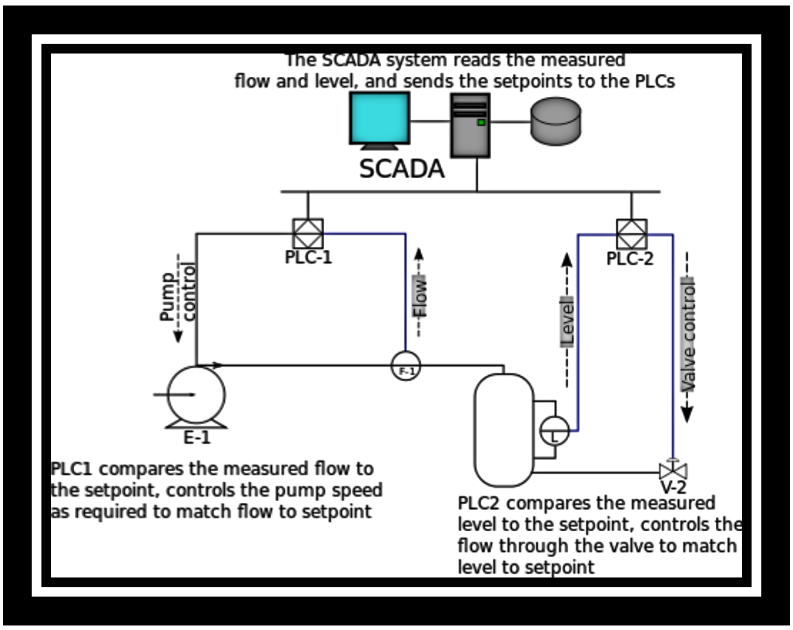

Our state-of-the-art laboratory is filled with all kinds of latest equipment for the use of the candidates who undergo ***PLC and scada training in Chennai***. You can get unlimited practical classes during your ***PLC and scada training in Chennai***. This will help you get a thorough **scada training** which will benefit you at your work. You can get the right knowledge on the latest technology and equipment during your ***scada training*** to make it easy for you to work. From the ***PLC scada training in Chennai***, you also can get a flexible training module which can cater to your training needs.

In addition to the concrete training module that we have developed, we also offer a flexible training module to all those who get our ***PLC Scada training in Chennai***. If your employees need a different kind of training, just let us know and we will take care of their training. Also, we offer ***PLC scada training in Bangalore*** and ***PLC scada training in Hyderabad***. Therefore, if you are in Karnataka or Andhra Pradesh, you can get your training from the nearest center.

Major Brands of SCADA:

1. Wonderware
2. Intellution Fix

Call us today or email us for any information or queries about our ***PLC scada training in Chennai***.